Estuaries

Lecture 18

Estuaries. Estuaries are places where fresh and salt water mix. Typically they occur where rivers enter the sea. Estero Limantour, Drakes' Bay, Point Reyes National Seashore.

Estuary development is quite pronounced in to today's world. During the Pleistocene, low sea level stands caused rivers to erode deep valleys on the continental margins. As sea level rose starting about 11,000 years ago, these valleys flooded to form estuaries like the Chesapeake and Delaware Bays. If the sea level were to stay constant long enough, estuaries would be all but wiped out. The Mississippi river carries so much silt that has filled its estuary in (below).

Circulation and stratification in estuaries. Estuary circulation is governed by density stratification mainly driven by salt concentration not temperature. The specific gravity of seawater is about 1.025. In other words seawater weighs about 2.5% more than an equivalent volume of fresh water. If you go back to the graph of water density as a function of temperature in the introductory aquatic lecture, you'll see that this is quite a bit greater density difference than obtains due to temperature stratification. On the other hand estuaries are often tidal and shallow, and river currents are often strong. Hence salt and fresh water are often mixed in estuaries despite strong density stratification. Left, salt wedge estuaries often occur at the mouths of very strongly flowing rivers like the Mississippi and the Amazon. In salt wedge estuaries most mixing takes place far from land. Deep estuaries (e.g. fiords) have enough "shear" across the density gradient to mix a fair amount of salt water into the fresher upper layer. This accelerates the upper flow and hence the mixing. 0 = salinity of fresh water ~ 0 ppt. S_o = salinity ocean water ~ 35 ppt.

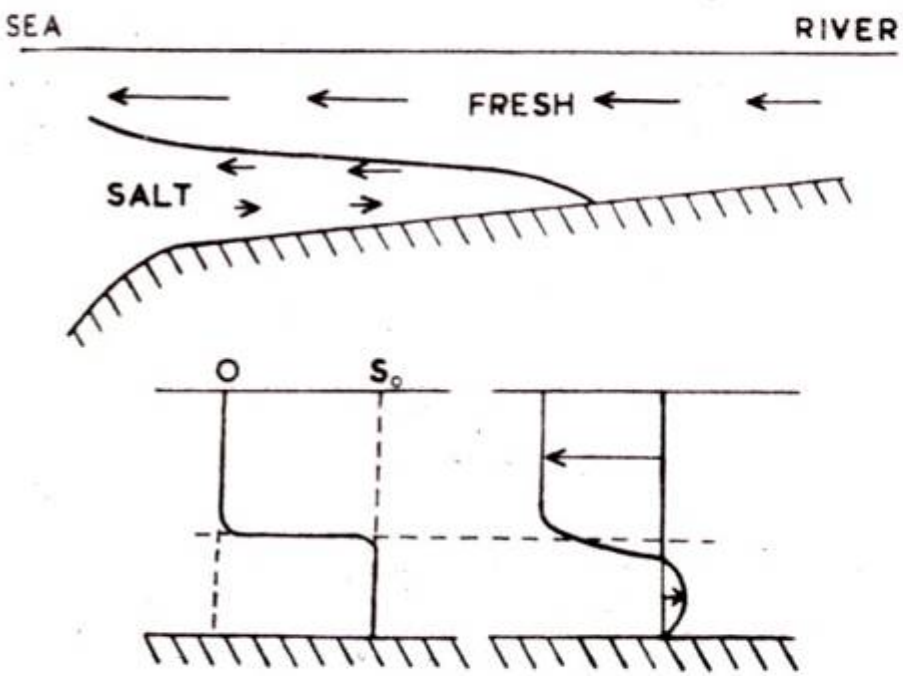

Fig. 1. Salt wedge estuary: above—section along estuary; below—typical salinity and velocity profiles.

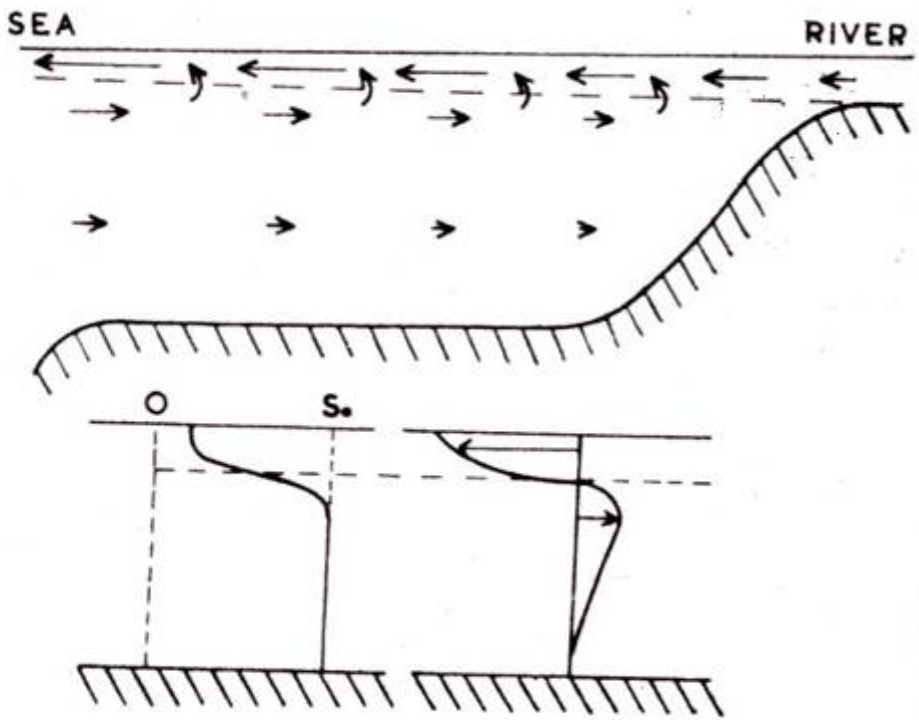

Fig. 2. Two-layer flow with entrainment: above—section along estuary; below—typical salinity and velocity profiles.

Partially mixed estuaries. Perhaps the commonest type. Most river valleys did not cut down that deeply in the Pleistocene as sea levels were only ~ 100m lower than today. Plus, much sediment has usually accumulated over the last 11,000 years. Fiords are an exception because glaciers cut many of their valleys to depths well below Pleistocene sea levels. In shallow estuaries, the “tidal prism” (The volume of water that flows in and out of the estuary on the tidal cycle) creates strong currents in the saltier layer because the volume of water in the tidal prism is confined to a shallow layer. The tidal prism is influenced by tide amplitude and area, not so much by depth of the water, especially depth below the low tide line. Much salty water is mixed into the fresher surface water.

Partially mixed estuaries are nutrient traps. Nutrients enter with the river and salt water. Sinking particles from the fresher surface layer drop into the saltier subsurface flow that carries them towards them back of the estuary. The deep salty current then mixes into the upper layer laden with mineralized plant nutrients. Thus estuaries are generally very productive.

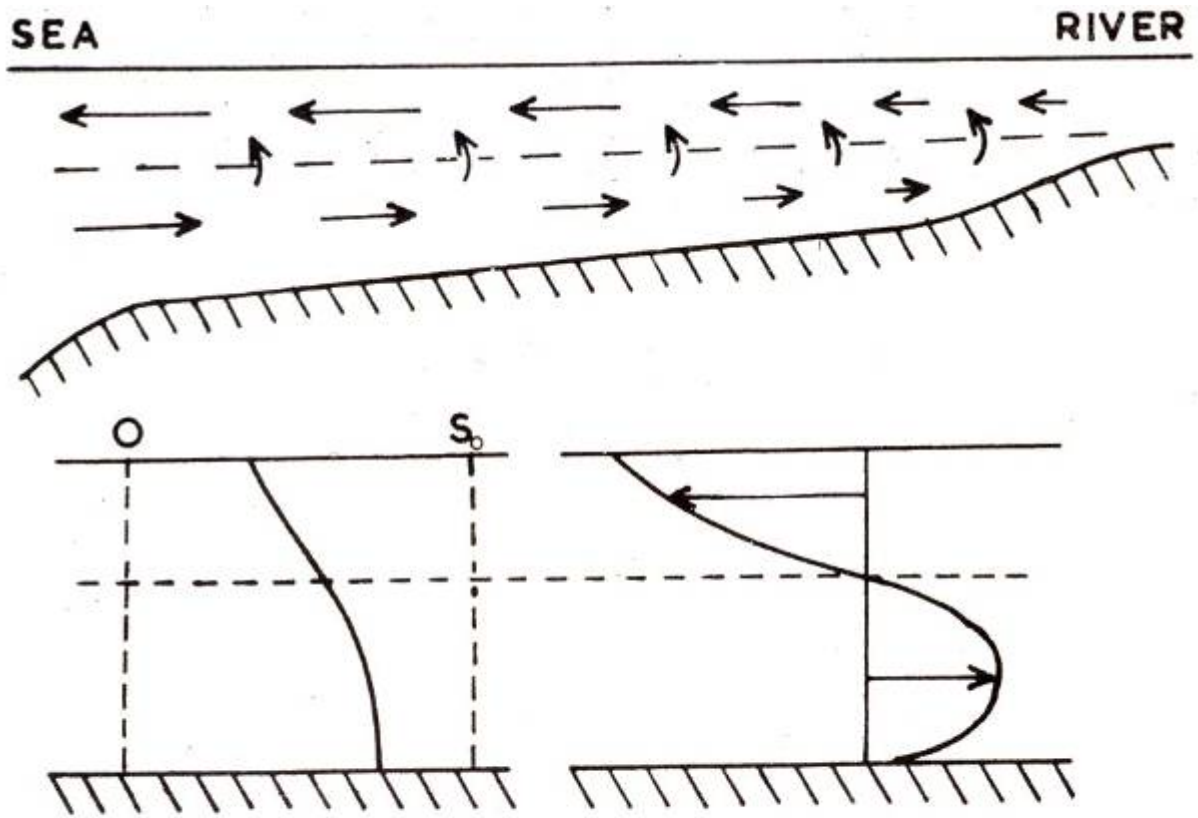

Fig. 3. Partially mixed estuary with entrainment and mixing: above—section along estuary; below—typical salinity and velocity profiles.

Bar Built Estuaries. When the coastal ocean is shallow, longshore currents often deposit long linear sand islands that dam up a considerable area of water seaward of the drowned river valleys. Cape Hatteras, North Carolina.

A89-20-3128

Cape Hatteras is almost in the center of this view of narrow coastal islands. Shoals here have long imperiled seamen, and in this picture even the clouds seem to be avoiding the sediment that is changing the ocean's hue near them. To the left above Hatteras is Albemarle Sound, and to the left below it are Pamlico Sound and Cape Lookout. The Wright Brothers National Monument is at Kitty Hawk, between Albemarle Sound and the Atlantic.

Columbia River Estuary. Estuary flows are on a large enough scale to be influenced by Coriolis' Force. The incoming salty current hugs the south bank of the Columbia while the fresher surface current hugs the north bank. See block diagram below. With tilted isolines of equal salinity..

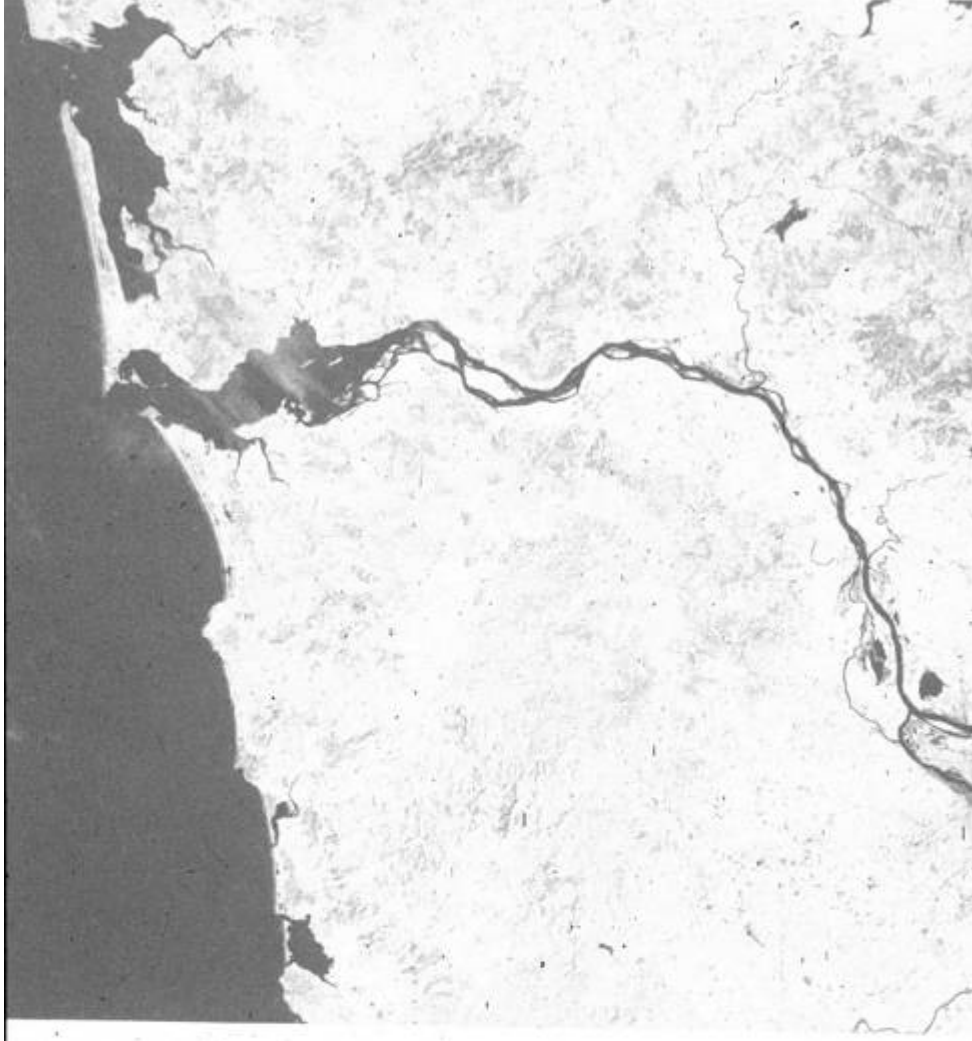

ig. 6.30. Estuary of the Columbia River between Oregon and Washington. hotographed by the Earth Resources Technology Satellite.

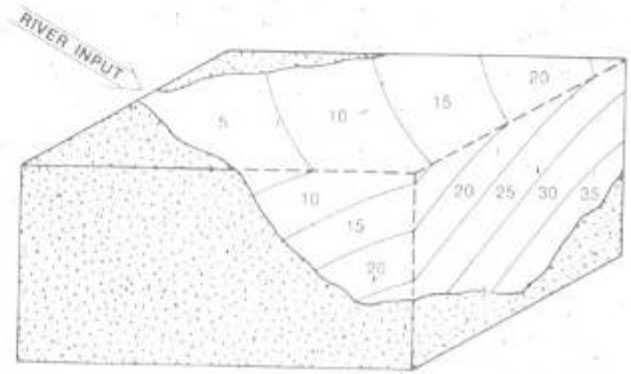

Fig. 6.31. Diagram of horizontal and vertical salinity gradients in a hypothetical estuary of he Northern Hemisphere. Numbers refer to salinity in

Negative estuaries. In arid areas “negative estuaries” may form. If evaporation exceeds freshwater input, the back of the estuary becomes a source of dense water saltier than seawater. Now seawater enters at the surface and saltier water from the back of the estuary flows out below. The Mediterranean Sea is a giant negative estuary. What do you suppose the consequences of this mixing pattern are for primary production?

During WWII German and Italian submarines used these currents to sneak past the British naval base at Gibraltar. The excellent submarine flick Das Boot’s obligatory depth charging scenes take place during the sub’s exit from the Mediterranean in the deeper saltier current. The idea was to cut power entirely and drift silently through the Strait in the appropriate current.

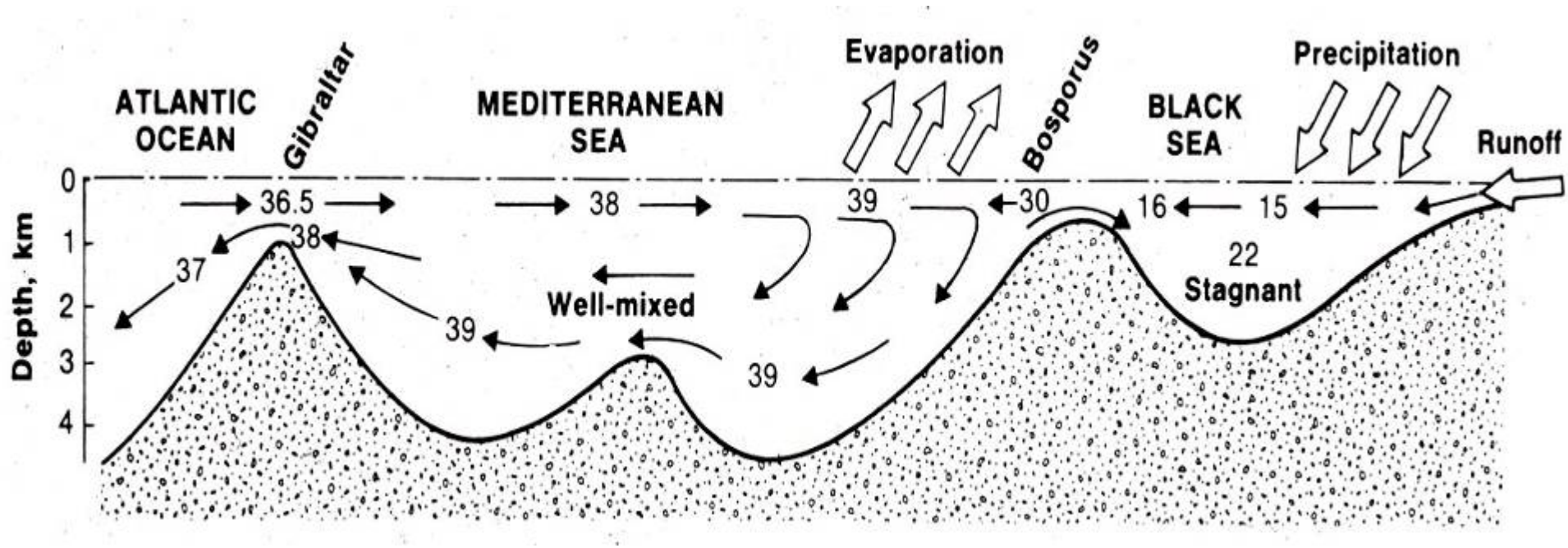

Estuaries are tough environments. Organisms in estuaries are subject to tremendous osmotic stress. Organisms adapted to fresh water have relatively low salt concentrations in their body fluids. When immersed in salt water, the greater osmotic potential of seawater sucks water out of them until their tissues become saltier. Marine organisms immersed in fresh water draw fresh water into their tissues. Some organisms can regulate their osmotic state by using powerful kidneys to excrete salt or water as needed to maintain osmotic homeostasis. The anadromous salmonid fishes are an example. See middle and bottom panels at right. Not only do estuaries have regular tidal fluctuations in salinity, but the have salinity crises during floods (when normally salty reaches of the estuary become very fresh) and droughts (when salty ocean water penetrates far back into the estuary). In the top panel notice that diversity tends to be quite low in estuaries, reaching a minimum where estuary specialist brackish water species are most numerous. Note that estuaries also tend to be isolated from one another by long stretches of ocean. This makes them very like islands. They are very vulnerable to invasion by weedy pests from other estuaries.

Fig. 6.32. Relative contributions of marine, freshwater, and brackish water species to estuarine fauna. Redrawn from Remane 1934.

Fig. 6.33. Variations in ion concentrations of body fluids or blood with changing external water salinities for osmotic conformers, osmotic regulators, and partial regulators.

Fig. 6.34. Salinity tolerances of 5 species of amphipods (*Gammarus*). Four of the five have limited and exclusive salinity tolerances. Only *G. duebeni* is euryhaline, capable of living in fresh water or seawater. Adapted from Nicol 1967.

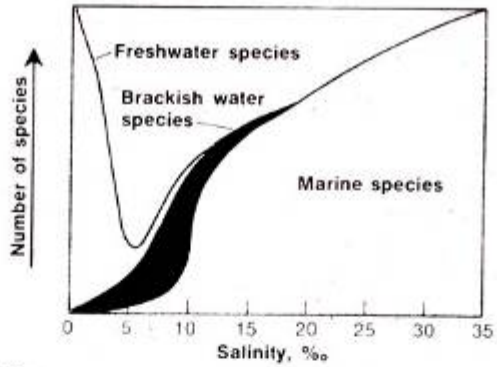

Fig. 6.32.

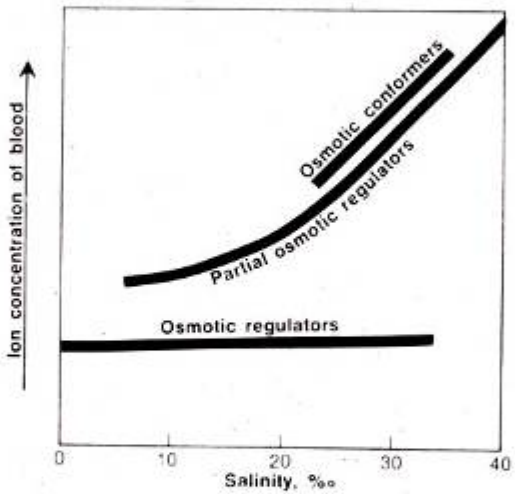

Fig. 6.33.

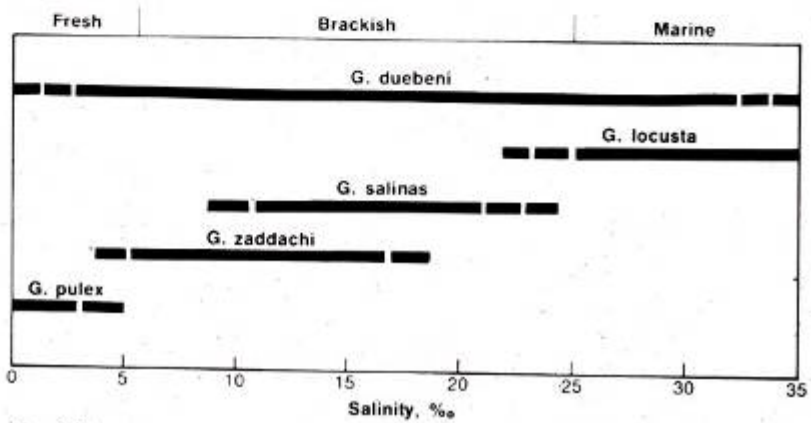

Fig. 6.34.

While diversity is low, high productivity leads to large populations of a few species of fish and shellfish. Fishers seek finfish, crabs, clams, and scallops. Many bivalves like Scallops are filter feeder that pump water over surfaces covered with mucous to trap an eat plankton and detritus. Since they are low on the food chain, the productivity of these population can be large.

Notice the eyes around the mantle margin of the scallop. The thick scallop muscle you eat is used to rapidly close the two shells, expelling a jet of water that drives the scallop some distance. A sufficiently motivated scallop can swim a few meters by repeatedly clapping its shells. You can demonstrate this in the lab by pouring some water from an aquarium with starfish in it into an aquarium with scallops. They can smell their predator and they go nuts.

Many marine animal have complex life cycles with different stages adapted to different ecological circumstances. Our commercially important Dungeness Crab's post-larval stage user productive estuaries up and down the coast as nurseries.

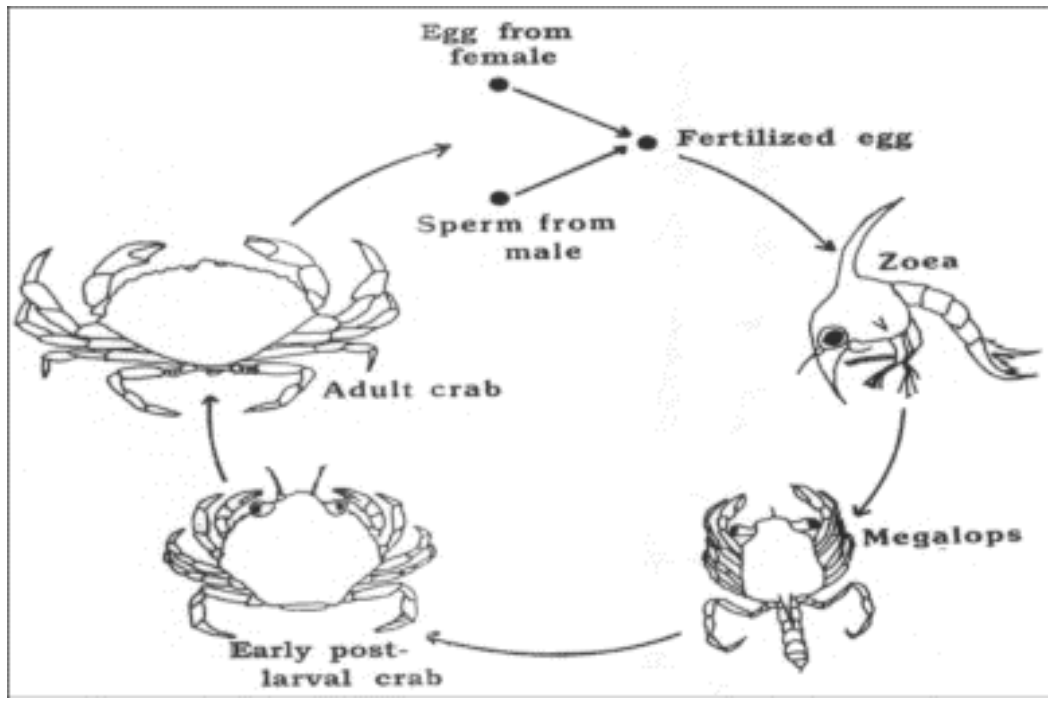

Mangrove forests often dominate estuaries in tropical regions. Several unrelated trees and shrubs have developed a tolerance for salt and flooded soils. The curious prop roots of mangroves have structures on them that that take up air which is then supplied to the roots via hollows in the woody root tissue. The roots also actively exclude salt so as to keep the cell sap of the plant at fresh water concentrations.

Bivalves have one of the most basic adaptations to osmotic stress. When the water is too fresh or too salty they shut their valves tightly and wait for better times. The burrowing species are buffered because the water in the sediment exchanges only slowly with the overlying water. Oysters ship well because they can live closed for several days if kept cool. Above, Oysters on Mangrove root.

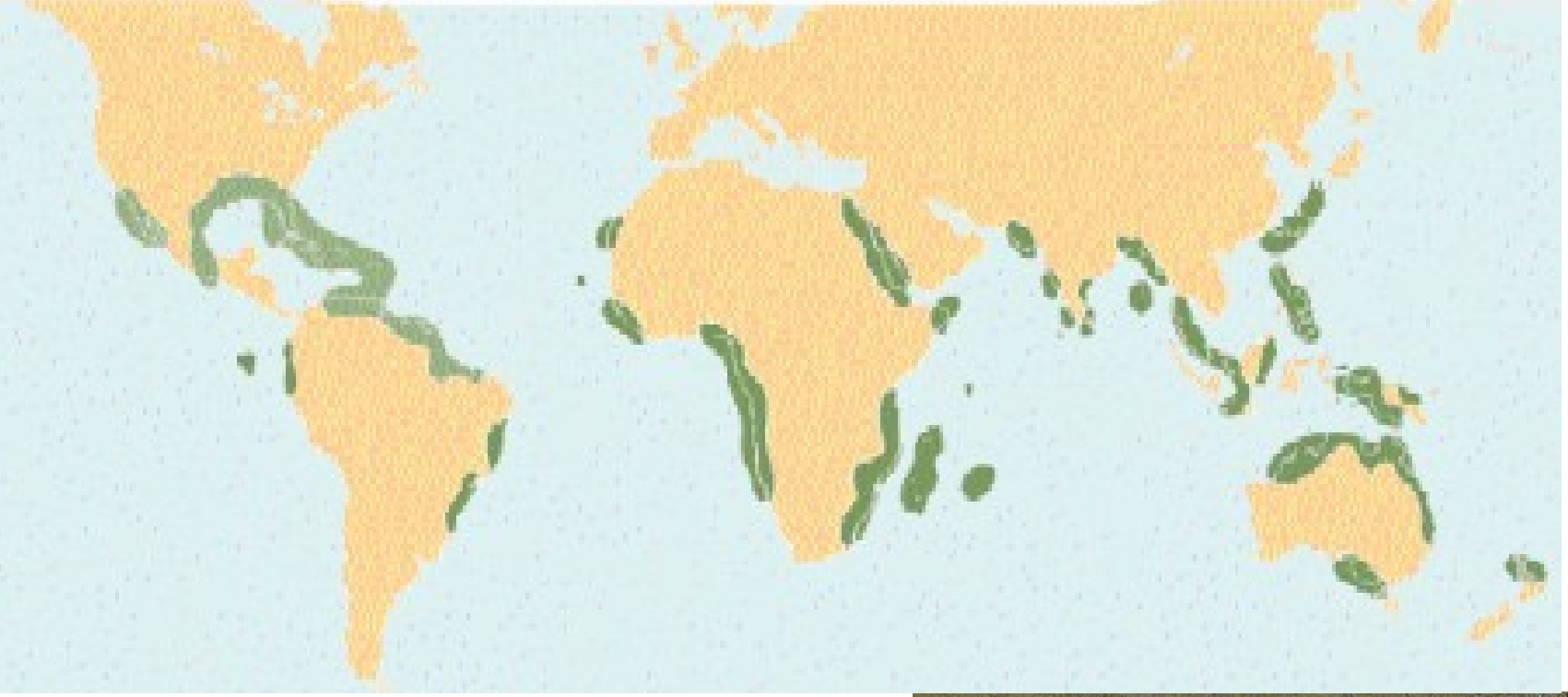

Mangroves have something of the same distribution as coral reefs. I have never heard an explanation of why mangroves are restricted to the tropics. At right, the northernmost mangroves in the Gulf of California. Midriff Islands near Bahia De Los Angeles.

Salt Grass (Spartina) dominated estuary, Cape Cod. Spartina and a few other higher plants have adapted to the salty soils of temperate estuaries. These systems are very productive and export large amounts of organic matter to other parts of the estuary.

The native California Spartina is being replaced by invasive Spartina populations, especially a hybrid between our native and the East Coast species pictured in the last slide. Estuaries have low diversity like islands and like islands suffer from disruptive invasions, often caused by humans. The Eastern Spartina was introduced by habitat restorers, who perhaps should have known better.

Port of Oakland. Many aliens are deliberately introduced to estuaries, such as Japanese Oysters into California Estuaries. Often a suite of hangers-on came with the deliberate introductions, such as boring snails that prey on Oysters and other bivalves. Lately, the big uptick in global trade has generated many new introductions. Ships take on large volumes of ballast water to counterweight cargoes. They often take on or discharge this water in estuaries where the biggest ports are located. Many marine species have planktonic larvae that can be transported in ballast water. The SF Bay has seen its food web transformed by Asian Clams that are so abundant that they graze most of the plankton out of the water. Eventually these invaders often acquire diseases or predators, but in the meantime they cause a lot of disruption. Active efforts are underway to regulate ballast water dumping.

Humans have lots of uses for estuaries. They are ports, part of the sewage system, fishing and hunting grounds, recreational areas, and sources of land for urban development or farms. Left, salt marsh converted to salt evaporation ponds; below, tidal flats filled for housing, both SF Bay. Below left, Dutch Polders—farmland developed by diking and draining the Rhine River estuary. The Dutch have something like doubled the area of their country over the centuries.

San Francisco Bay Conservation and Development Commission (BCDC). By 1965, the filling of the SF Bay-Delta system was well advanced. A Save the Bay movement grew up in the early 1960s to try to prevent the 2020 scenario depicted below, with the Bay reduced to riverine proportions. The result was the BCDC a regional governmental agency charged with managing the Bay established in 1965. While many problems and conflicts remain, many good things have been accomplished. In 1972, the US Clean Water Act set up a system for making large grants to municipalities to build sewage treatment plants. The Bay's waters, especially the relatively poorly mixed South Bay, have improved a lot since I was a kid.

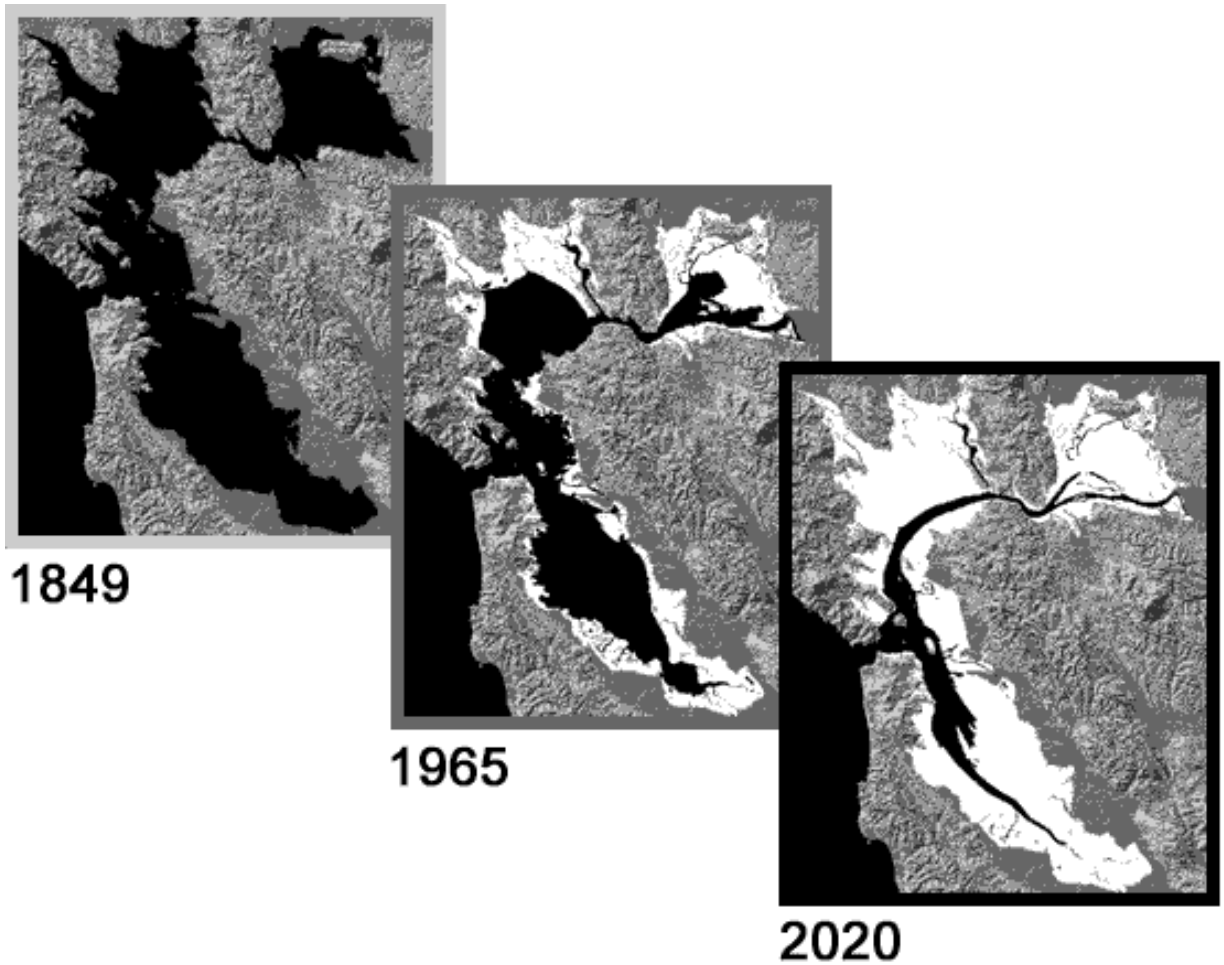

Annapolis, Maryland. An illustration of how urban development tends to crowd the shores of estuaries. Many great cities are estuarine, often established originally as port cities with the river for navigation inland. London, Amsterdam, Venice, Calcutta, Hong Kong, Shanghai, San Francisco, Buenos Aires, and New York are among the many examples. Many small cities like Annapolis are also estuarine. Here we see yacht docks in the foreground and the US Naval Academy in the background. Naturally, intense use makes for many management issues and political headaches!